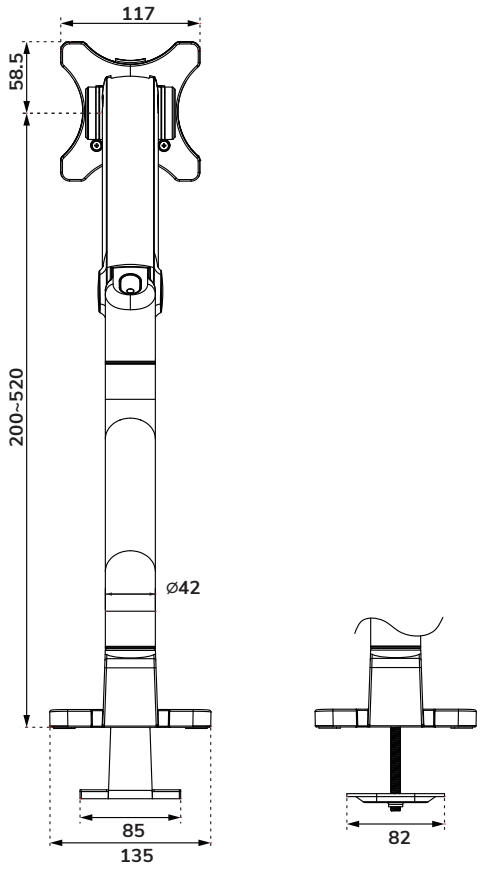
117
58.5
200~520
ø42
85
135
82

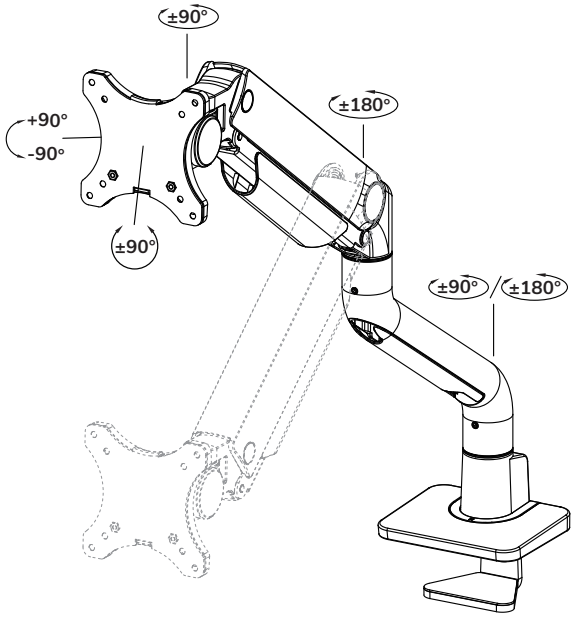
±90°
+90°
-90°
±180°
±90°
±90°
±180°

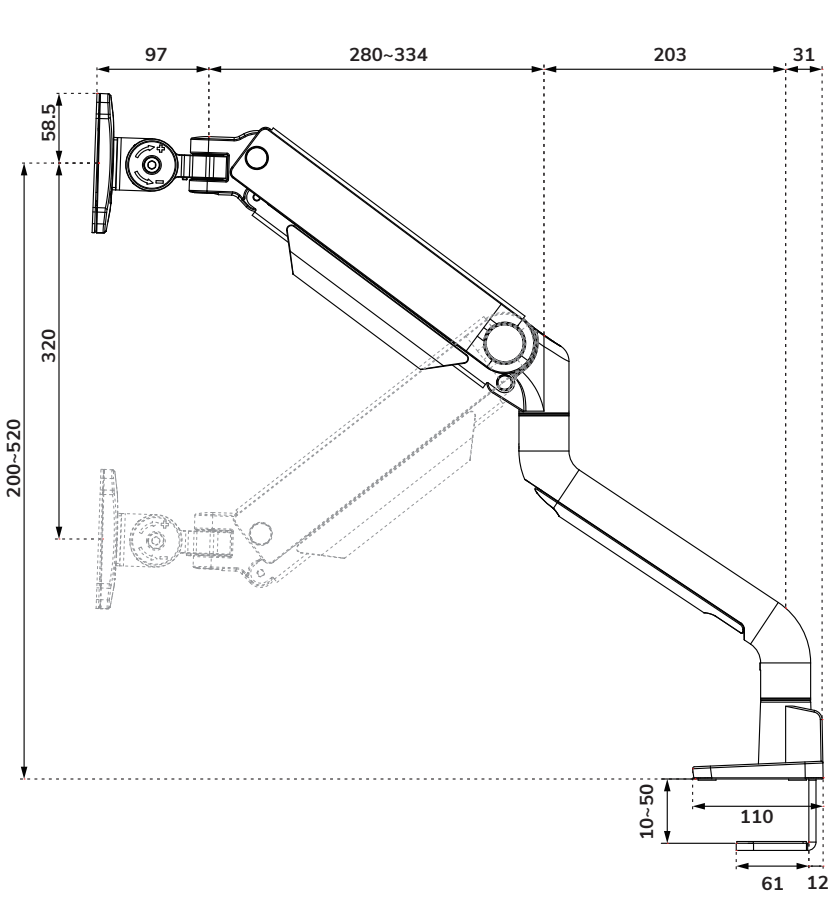
97
280~334
203
31
58.5
320
200~520
10~50
110
61
12

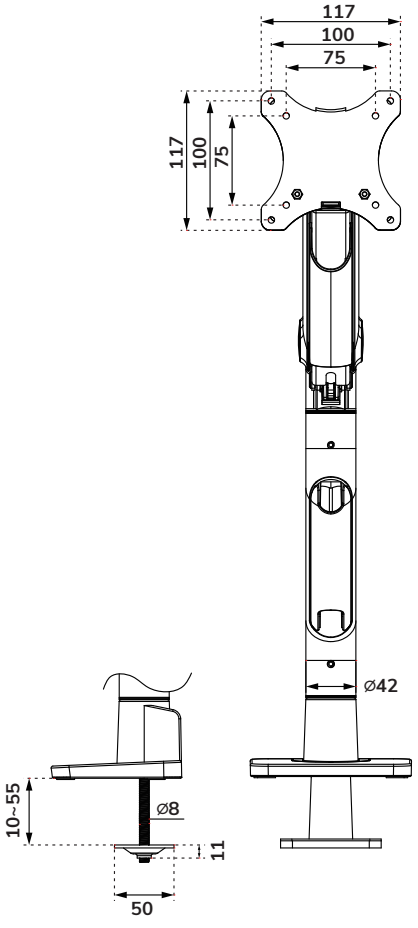
117
100
75
117
100
75
ø42
10~55
ø8
11
50

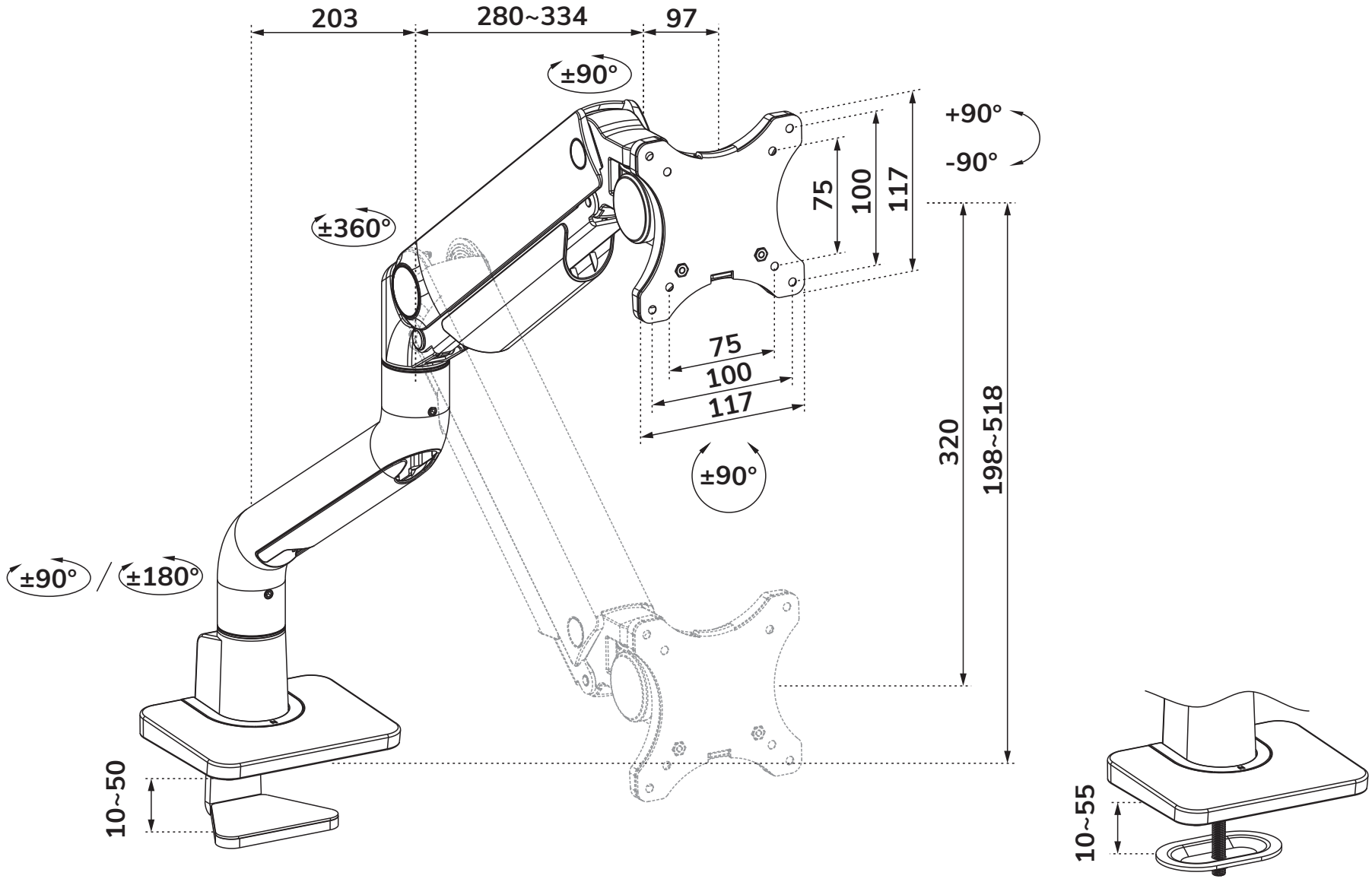

Neomounts

Measuring unit: mm